SALICE

Futura Smove 7555

Full Extension Soft-Close Undermount Drawer Slide

Drawer Length	Part No.	Vendor Reference No.
9" (229mm)	125509	A7555/229
12" (305mm)	125512	A7555/305
15" (381mm)	125515	A7555/381
18" (457mm)	125518	A7555/457
21" (533mm)	125521	A7555/533

FEATURES

- Full extension slide fixed to the drawer front by mounting clip
- Fully integrated Salice Smove in the slide, decelerating the closing action of the drawer
- Safety feature that prevents the drawer from turning over
- Full extension drawer slide fixed to the drawer front by mounting clip. Choose from the toolless Futura six way adjustable mounting clip or the Futura front mounting clip.
- Toolless Futura six way adjustable mounting clip. Vertical adjustment: +2.5mm (3⁄32"). Lateral Adjustment: ±1.5mm (3⁄64"). Frontal Adjustment: ±2mm (5⁄64")
- Futura front mounting clip. Vertical adjustment: +3mm (7⁄64")
- Mounting clips are **required** for installation

SPECIFICATIONS

Mounting	Under
Extension	Full Extension
Load rating	75 pound class
Clearance	3⁄16" (5mm) minimum top clearance
Opening	Opening minus 25.5mm (-1") drawer height
Action	Telescopic
Finish	Bright zinc-plated
Sold Unit	Per Pair

A

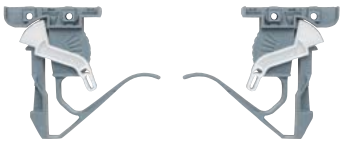

B

MOUNTING OPTIONS

	Part No.	Vendor Reference No.	Description
A	125551	A750.010	Salice Futura Six Way Adjustable Mounting Clips (Set L & R)
B	125550	A710.610	Salice Futura Front Mounting Clip (Set L & R)
C	125553	AGSKXR5	(optional) Salice Futura Narrow Metal Rear Mount Bracket

C

8648 Glenmont Drive, Suite 150
Houston, Texas 77036

[CALL/TEXT] 713.839.8586
[TOLL FREE] 800.788.4450

sales@cabinethardware.com

www.cabinethardware.com
www.richelieu.com

Dimensions

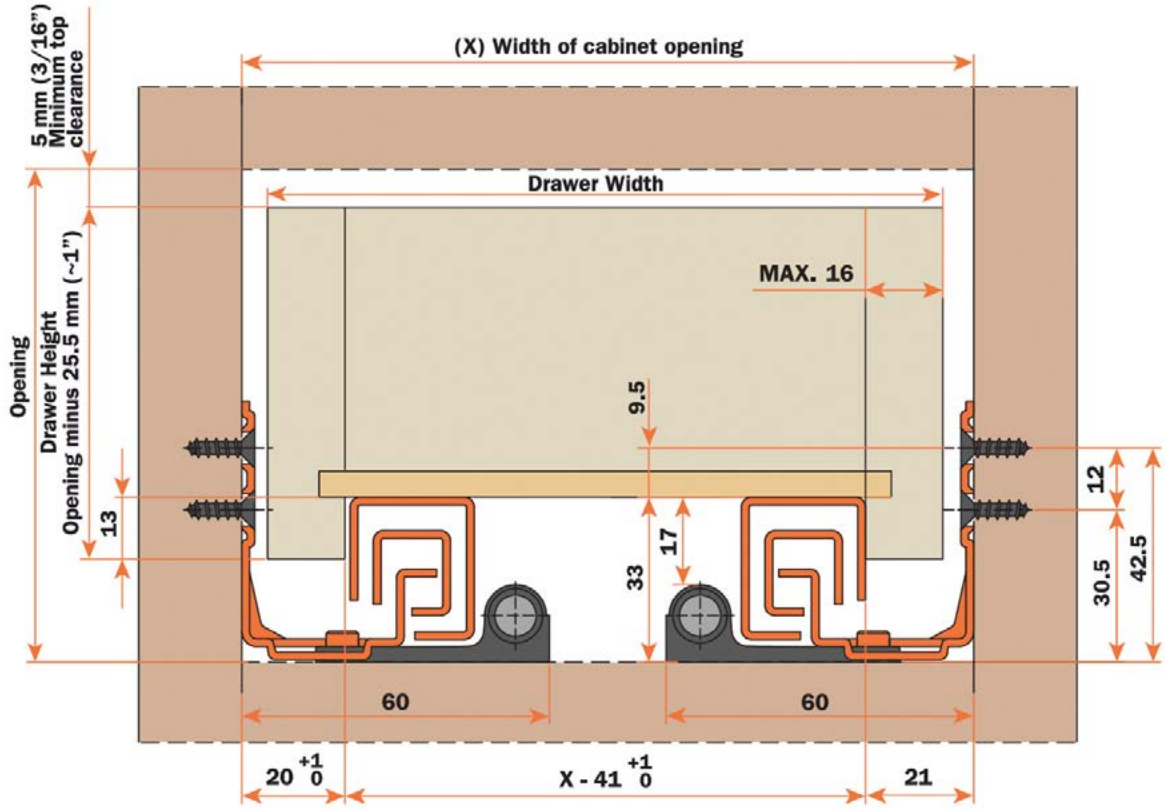

CALCULATION FORMULA FOR OUTSIDE DRAWER WIDTH

For drawer side thickness of:	5/8" (16mm)	19/32" (15mm)	9/16" (14mm)	1/2" (13mm)	15/32" (12mm)
Deduct from inside cabinet width:	3/8" (9mm)	7/16" (11mm)	1/2" (13mm)	5/8" (15mm)	21/32" (17mm)

Example: For a 15" inside cabinet width and a 5/8" thick drawer, subtract 3/8" from the inside width of 15" = 14 5/8" drawer width.

Face Frame Drawer Slide Assembly Using Metal Socket

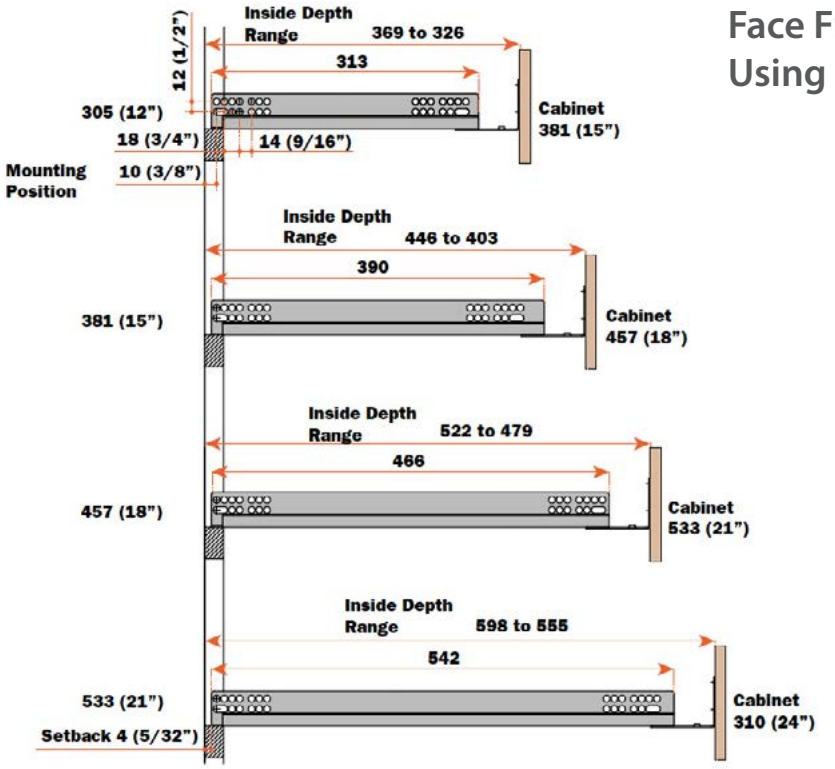

Fixing runner on cabinet side

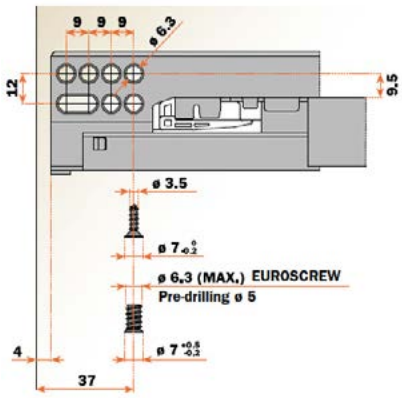

Drawer Drilling: 6 Way Adjustable Mounting Clip

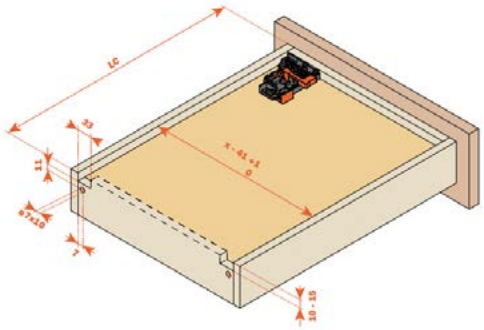

4 Sided Drawer Box with Attached Front

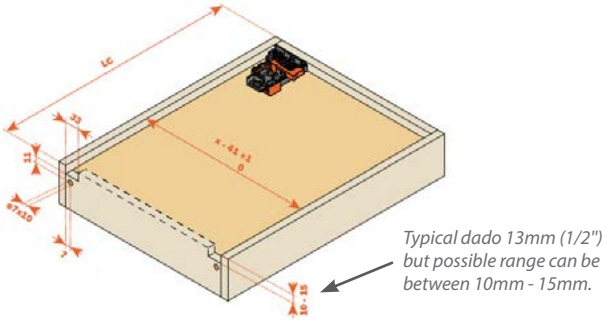

4 Sided Drawer Box Used for Roll Outs

Front Fixing Clip: 6 Way Adjustable Mounting Clip

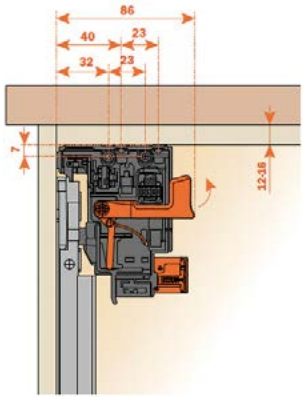

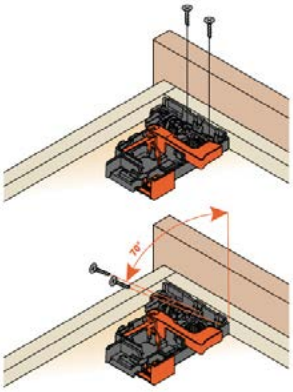

IMPORTANT: Use the 6 way adjustable clips with drawers 8" or wider (min. internal width).

Drawer Adjustment: 6 Way Adjustable Mounting Clip

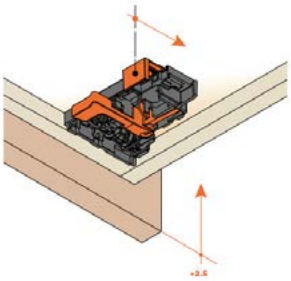

Drawer Vertical Adjustment
Slide the orange adjuster for vertical adjustment = + 2.5mm (3⁄32")

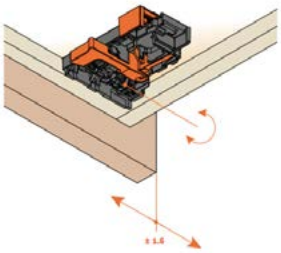

Drawer Lateral Adjustment
Rotate the white wheel for adjustment = ± 1.5mm (3⁄64")

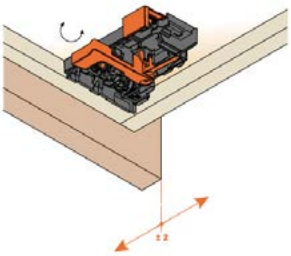

Drawer Frontal Adjustment
Rotate the black wheel for frontal adjustment = ± 2mm (5⁄64")

Drawer Drilling: Standard Clip with Vertical Adjustment

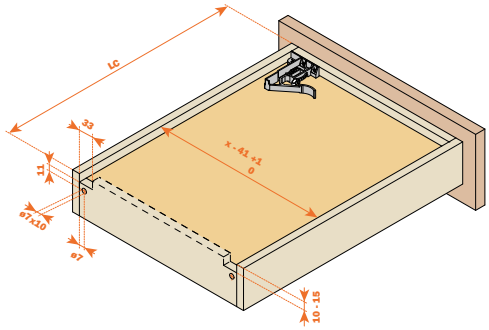

4 Sided Drawer Box with Attached Front

Drawer Back Preparation

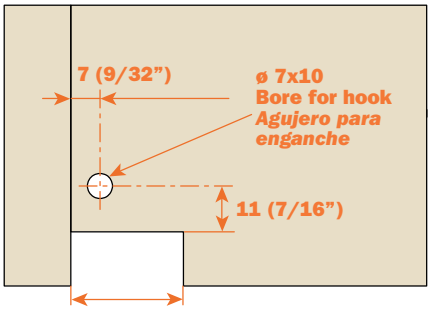

33mm (1 5/16") Minimum rear notch

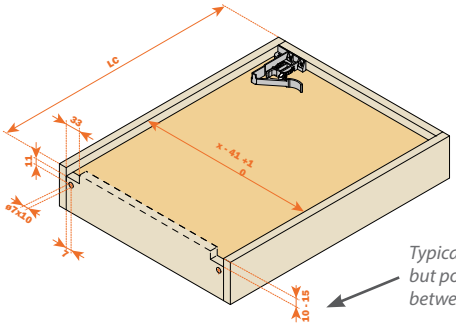

Typical dado 13mm (1/2") but possible range can be between 10mm - 15mm.

4 Sided Drawer Box with Roll Outs

Front Fixing Clip: Standard Clip with Vertical Adjustment

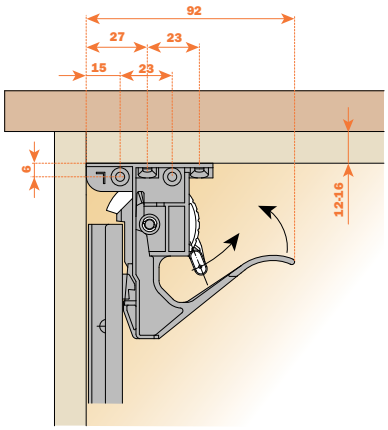

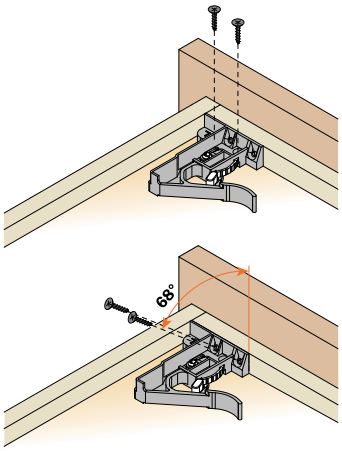

IMPORTANT: Use the standard clip with vertical adjustment with drawers 8" or wider (min. internal width).

Drawer Adjustment: Standard Clip with Vertical Adjustment

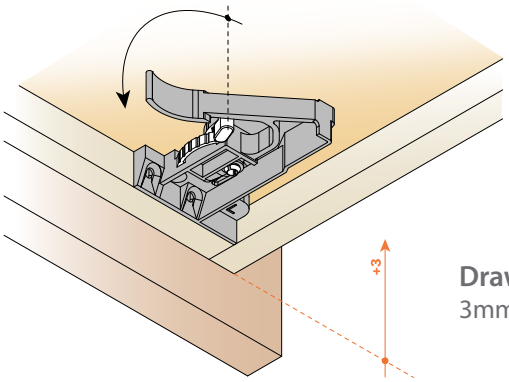

Drawer Height Adjustment
3mm (7/64") Using the lever indicated